Swiftwing — Screw Galley

0 — £5,800

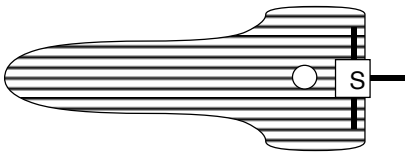

wood — 1 — 83 tons — 5

Bridge: C H T S
Deck:
Maneuver:
Move: 5 4 3 2 1

Hull hits: VH H M L VL
Marines:

Cleansing Wind — Screw Galley

0 — £26,560

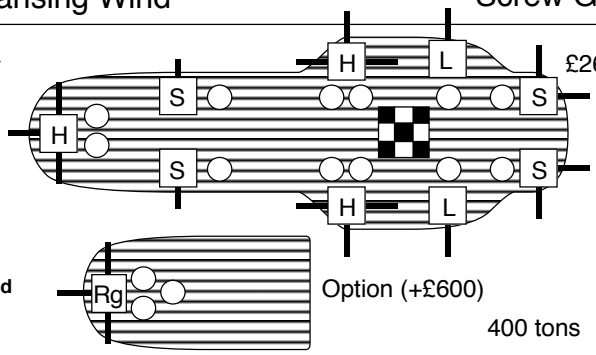

wood — 4 — Option (+£600) — 400 tons — 4

Bridge: C H T S O
Deck: O
Maneuver:
Move: 4 3 2 1

Hull hits: VH H M L VL
Marines: O

HMS Swift — Aerial Gunboat

2 — £27,482

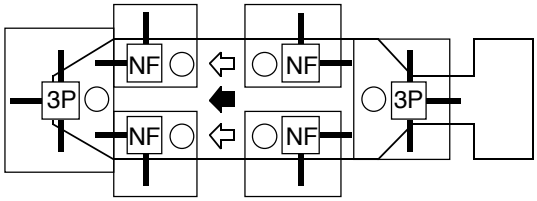

steel — 2 — Boiler = 3 — 200.5 tons — 7

Bridge: C H T S
Deck:
Maneuver:
Move: 7 6 5 4 3 2 1

Hull hits: VH H M L VL
Marines: (opt.)

HMS Impenetrable — Aerial Gunboat

5 — £126,392

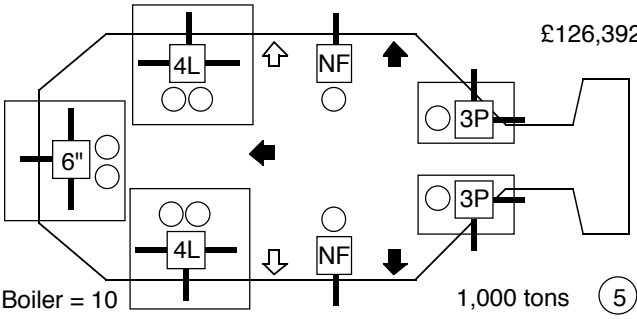

steel — 10 — Boiler = 10 — 1,000 tons — 5

Bridge: C H T S O
Deck: P
Maneuver:
Move: 5 4 3 2 1

Hull hits: VH H M L VL
Marines:

©1999 - Joseph R. Boeke